Architectural scale models

Grønlund, Louise; Mathiasen, Nanet; Frandsen, Anne Kathrine; Sørensen, Pernille

Published in:
Envisioning Architectural Scales in the Analogue and Virtual Representation of Architecture

DOI:
https://doi.org/10.60558/eaea16-2023-244

Publication date:
2023

Document Version:
Publisher's PDF, also known as Version of record

https://doi.org/10.60558/eaea16-2023-244

Louise Grønlund [a], Nanet Mathiasen [b], Anne Kathrine Frandsen [c],
Pernille J. E. Sørensen [d].
[a d] Institute of Architecture and Design, Royal Danish Academy – Architecture, Design, Conservation, Copenhagen, Denmark. [b c] AAU Build, Copenhagen, Denmark.

Architectural scale models: Methodologies for studying daylight qualities

Introduction

Light has no scale. That is the traditional view upon light. That is is also why an architectural scale model can be used to investigate daylight and space (Mary Guzowski, 2018). The architectural model can be produced in a variety of scales - and daylight will follow and show the correct amount and distribution of light in relation to the space, provided that the model has the right proportions, apertures, form, orientation, surface character and reflectance. The scale model has been an architectural tool probably for as long as the discussion of architectural design has existed (Anne Kathrine Frandsen, 2005). Although the scale model has been and is still widely used in architectural practice, it is limited by the human scale when it comes to investigating the daylight qualities and the human experience and perception of the light in a space.

The scale model is commonly used in architectural design processes either to represent a final project or as an outlining tool during initial processes. It is useful for understanding the spatial experience as a whole. At the same time, the scale model can influence a project in an unforeseen positive direction.

In addition to spatial understanding, the scale model can serve as a tool for investigating the distribution of daylight and how this affects the experience of the space. Daylight changes how the space and its atmosphere are experienced depending on the geometric shape of the space and the apertures. (Nanet Mathiasen, 2006).

This study examines the methodologies that can be used to represent daylight and its spatial qualities. Therfore a comparative study of three forms of representtation: *The observation of daylight in a scale model; a photographic registration of daylight in a scale model; and a simulation of luminance levels and distribution.*

The qualities of daylight are studied in a specific space. The space is one of three spaces in a pavilion to be built in 1:1 scale in the inner city of Copenhagen.[1] The geometry of the space will be determined by the project. This paper discusses a selection of the project's preliminary studies.

The study seeks to answer the following questions:

- *What daylight qualities can be depicted by the different types of representation?*
- *How can the qualities of daylight be interpreted?*

The different methodologies for representing the perceived daylight in the space are examined in a comparative study in which the ability of these methodologies is observed.

[1] The pavilion will be in place from July to October.

Below is a description of the theories of Anders Liljefors and Sophus Frandsen. This is followed by a presentation of the representations of daylight applied, including observing daylight in a scale model, photographic registration of daylight in a scale model; and simulation of luminance levels and distribution. Each constituting the different types of representation. Subsequently, there are descriptions and analyses of the perceived daylight qualities as they relate to the various types of representation.

Theory for describing the quality of daylight

The theoretical point of departure for the studies comprises Anders Liljefors' seven variables for describing daylight quality and Sophus Frandsen's categorisation of spatial shadows. The parameters of the three types of representation are examined on this basis.

Anders Liljefors[2]

In his book *Seende och Ljusstråling, Anders Liljefors describes daylight from two different approaches by examining the physical and the visual properties of daylight (*Anders Liljefors, 1997). He differentiates between light that can be *measured as physical luminosity, and the light that is perceived, which is a description of the visual conditions concerning the nature and presence of light (*Anders Liljefors, 1997). This study focuses on describing light that is visually perceived.

Liljefors defines seven variables that are used to describe how light in a space is perceived: *level of lightness, spatial distribution of brightness, shadows, reflections, glare, colour of light, and colours (*Anders Liljefors, 1997).

The *level of lightness* describes the space's general light conditions from light to dark, a description of the light's inherent variation, degree of intensity and contrast. The perceived level of lightness is affected by the level of lightness to which the eye adapts. This means that a space which is initially experienced as bright can subsequently have the effect of being experienced as dark.

The *spatial distribution* of brightness describes the sources of light in a space and how this light is distributed within it, i.e. where is it bright and where is it dark.

Shadows describes the location and demarcation of shadows and whether they are sharply or diffusely defined; the intensity of brightness or darkness in the shadow and the degree of variation between darkness and brightness within it. Liljefors differentiates between attached shadow and cast shadow and describes the types and characteristics of the shadows themselves.

Reflections are defined by the nature of the surface and are produced by shiny and glossy surfaces. Reflections are affected by the direction from which they are perceived, which is why they change as the observer moves around in a space and will be perceived as dynamically variable.

Glare arises when the contrast is perceived to be too great for the eye to spontaneously adapt to it. Glare is not unpleasant per se, but will eventually be tiresome and will always lead to undesirable brightness contrasts.

[2] Anders Liljefors, architect and professor emeritus, KTH Royal Institute of Technology.

The *colour of light* defines the shade of colour associated with the light that is affected by and observable in the interplay between the surfaces in a space and the objects within it, meaning that the colour temperature is not exclusively defined by the colour of the illuminant. Often, daylight is perceived as colourless, but with a tendency to be warm, neutral or cold. When moving from one space to another, the experienced colour of light will be affected in the same way as the level of light, depending on a previous adaptation.

The *colour* defines the colour of the surfaces illuminated by the light in question. It is affected by the reflective properties of the surface and by the light's properties and must be kept separate from the colour of light.

In addition to these seven variables, Liljefors defines luminance as a visual concept to define the luminous radiation from a surface in a defined direction. Luminance is a photometric value measured in candela per square metre (cd/m²). The value is affected by the illuminance of the surface, the angle of the surface and the surface's reflective properties. The measured value cannot in itself describe any visual properties of the light (Anders Liljefors, 1997).

Sophus Frandsen[3]

Sophus Frandsen has developed a categorisation of shadows defined according to size, location within a space and illumination intensity (Sophus Frandsen, 1985). He describes the shadows within a space and the shadows cast by objects, respectively. He divides the shadows cast by objects into types of shadows from 0 to 10. These describe in minute detail the shadows cast by objects according to their shading. He groups the shadows within a space into four categories: *large spatial shadows*, *large attached shadows, small attached shadows*, and *small shadows cast by details and textures* (Sophus Frandsen, 1985).

The *four shadows* categorise the types of shadows experienced within a space. The large spatial shadows and attached shadows are defined as being larger than human scale, and the small, attached shadows and shadows cast by details and textures as being smaller than human scale. The large spatial shadows and attached shadows describe the shadows within the space, the shadows which the body moves through and occupies. The large spatial shadows are defined by the geometry of the space, whereas the large attached shadows are defined by furnishings and sizeable elements within the space. The shadows cast by objects, details and textures relate to the illumination of things, objects and surface textures (Sophus Frandsen, 1985).

Methodologies for representing daylight

This study is part of a comprehensive research project which investigates the poetic and sustainable potential of daylight. The project will result in a pavilion, in 1:1 scale, to be built in July 2023. The pavilion is designed to enable a walk through a series of three spaces. The corridor has no apertures and its surfaces are black. As a result, the corridor contrasts with the three spaces, all of which will represent different types of daylight: sunlight, light from the sky and reflected light. To delimit the scope of

[3] Sophus Frandsen Architect and Docent at the daylight laboratory at the royal danish academi of Architecture.

this study, this paper describes only one of the three spaces: *the space with light from the sky*. Light from the sky can be characterised as the primary source of light, as it is always present in a space, albeit less perceptible in direct sunlight as sunlight's intensity outshines the sky's characteristic spatial distribution of brightness (Marie-Claude Dubois, 2019).

As the pavilion will be located in Copenhagen, Denmark, it is under a Nordic sky. Nordic light is characterised by its profusion of diffuse light from the sky and the relatively low altitude of the sun (Nanet Mathiasen, 2006). It is under these light conditions that the spaces in the pavillion are going to be perceived and experienced.

Geometric dimensions of the space

The floor plan of the pavilion is shaped by the public square's existing architecture. The space for this study, measures 3.8 x 3. 8 metres and its volume is 5 metres tall (See Fig. 01). The aperture is a skylight, placed in the corner along the north-west wall, measuring 1 x 1 m. From the skylight, the aperture slopes down and opens out as a funnel of light into the space, with plane dimensions of 1.4 x 1.4 m. The shape of the bottom edge of the funnel is defined by the path of the sun in that the sun wanders around inside the funnel but never shines directly into space (See Fig. 01).

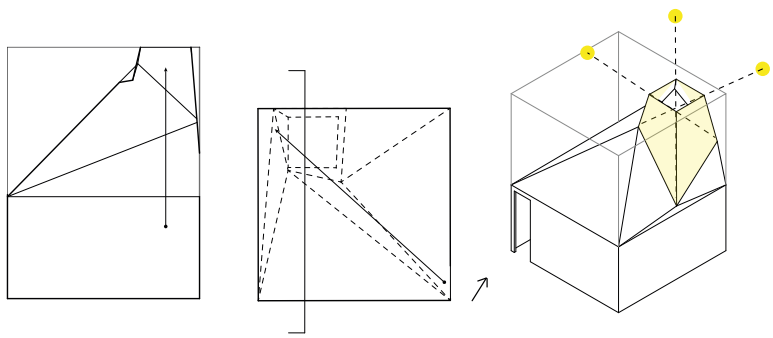

Fig. 01. Section and plan of the space in the Pavilion. The arrows define frem where the studies have been made. Isometric shows how the funnel is shaped by the path of the sun.
Source: Own illustration.

Daylight laboratory

The studies were carried out at the Royal Danish Academy's daylight laboratory, where it is possible to reproduce the light from the sky and sunlight of any location in the world (Ebbe Christensen, 1976). The floor space is 20 m² and windowless, and all the walls have mirrors. A white canvas is suspended below the ceiling covering the electrical sources of light, which evens out the illumination. The sun is a parabolic concave mirror that rotates around the object on a rail, held in place by a chain, to reproduce the sun's daily zenith passage on the 21st in a specific month (Ebbe Christensen,1976).

Study parameters

This study uses three different types of representation. The methodologies are simple and intuitive to use. They are typically applied in the initial development stage of a project.

The daylight studies were conducted using the following types of representation:

- Observation of daylight in a scale model;
- Photographic registration of daylight in a scale model;
- Simulation of luminance levels, distribution and contrast conditions

All studies were conducted at the daylight laboratory under identical light conditions and settings from the same fixed viewpoints in terms of observation, registration and simulation.

All the studies were carried out in the daylight laboratory under an artificial sky set for the following time periods: 21 June and 21 September, at 9.00 am, 12.00 noon and 3.00 pm in combined sunlight and light from the sky, as well as light from the sky only.

Observation of daylight in a scale model

The scale model is made on a scale of 1:10 in wood-pulp board, which is why all of the model's surfaces are the same, i.e., equally bright and matt. The model is considered to be a spatial object that is studied from several angles, focusing on interior spatial conditions. It is large enough for its interior daylight conditions to be visible from an observation opening without allowing false light to enter the space (David Egan, 2001).

Fig. 02. Photography of the scale model in the daylight laboratory at the Royal Danish Academy.
Source: Own Photograph.

Photographic registration of daylight in a scale model

The same scale model is used to register daylight through series of model photographs. The registrations were photographed using a wide-angle 26 mm f 1.6 lens. The placement of the camera represents the eye level of a standing person, i.e. 160 cm. All registrations in the model photographs were taken from the same position to provide a comparative basis.

The photographic representations are a series of photos of the aperture and the appereances of daylight in the space (Louise Grønlund, 2015). The aperture is used

to represent the experience of seeing the aperture from below gazing up towards the ceiling, i.e., a representation of the aperture's geometric shape. (See Fig. 03) The photograph of the appereances of light is used to represent the experience of the effects of the light, i.e. the visual, qualitative properties within the space. Seen from the arrival through the doorway, looking towards the north-west corner where the aperture is placed (See Fig. 03).

Fig. 03. Photography in the scale model of the aperture (left) and the appearances of daylight (right).
Source: Own Photographs.

Simulation of luminance levels and distribution

The simulation of luminance levels, distribution and contrast conditions is also a series of appereances of light and apertures that were carried out in the same manner as above (See Fig. 04). The series is calculated in the 'Fusion Optix' program and measures the volume of daylight reflected by the surfaces in the space. The measurements were taken in both direct sunlight and direct light from the sky. The luminance measurements represent the level of lightness, spatial distribution of brightness and contrast conditions, as defined by cd/m² (Marie-Claude Dubois, 2019). For interpreting the luminance calculations, the white and yellow colours indicate the highest level of lightness, whereas turquoise and black indicate the lowest. Thus, the luminance calculations act as a diagram in which the colours indicate the spatial distribution of daylight.

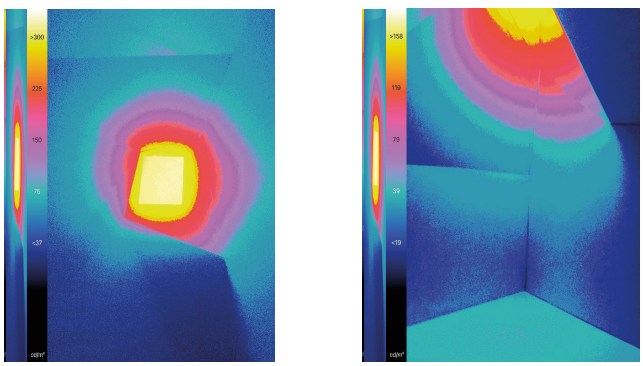

Fig. 04. Simulation of luminance levels and distribution of the aperture (left) and the appearances of light (right).
Source: Own Simulations.

Studies and observations

Concepts for describing daylight

In the following, the daylight in the space is defined according to Liljefors' seven concepts for describing the effect of daylight and Frandsen's four types of shadow.

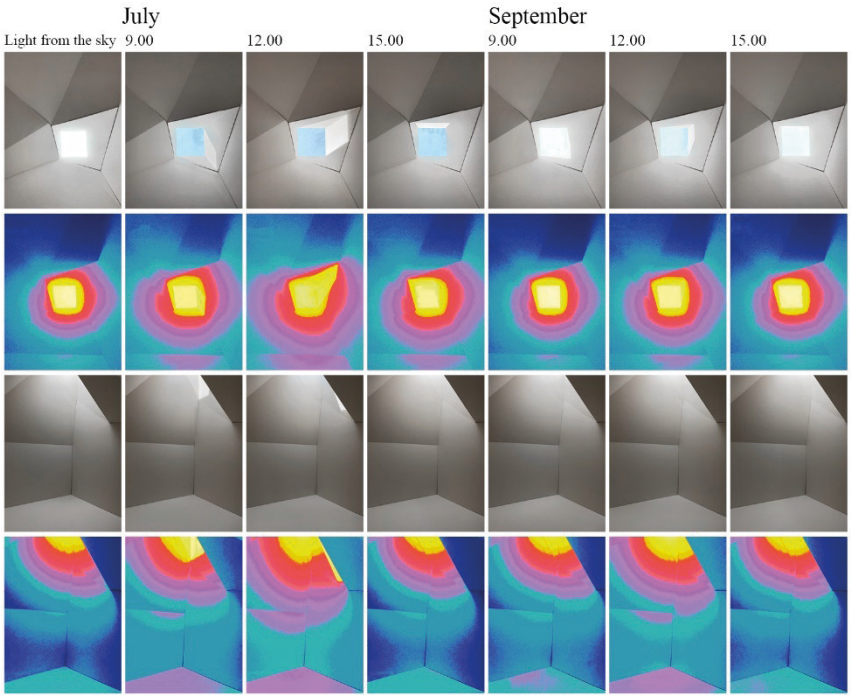

Fig. 05. Series of photographic registration of daylight and simulations of luminance levels and distribution in the scale model.

Source: Own photographs and simulations.

Level of lightness

Observations of daylight in the scale model describe an experience of the soft, diffuse light from the sky emanating from the funnel. The space is experienced as bright, with darker shades but not contrasts. The space has a high level of light without total darkness. The differences in level of lightness are created by the ceiling's intersecting surfaces, with each surface having its own shade of emanated light.

Subtle shadow differences outline the space, and distinct demarcations of light are produced solely by the geometric forms.

The photographic registration generally depicts a varying level of lightness in the space. There are subtle differences between light and dark, and the varying intensity of light is experienced almost as contrasts, as opposed to the observations in the scale model.

The simulation of the luminance values underpins the general experience of the space as bright, with no black areas. It can be observed in the simulations that the space is evenly illuminated and that small areas are brightly illuminated, at the same

time that a small number of surfaces are much darker. The level of lightness varies during the day and year, as is seen in the tables alongside the luminance simulations where the values, indicated by colour, vary.

Spatial distribution of brightness

The scale-model observations depictes the top of the funnel to be perceived as the brightest spot in the space during periods when it is illuminated by sunlight. The other ceiling surfaces, illuminated solely by reflected light, cause the funnel to appear even brighter. The brightness is evenly distributed from the funnel down into the space until it meets the edges of the ceiling where contrasts arise.

The photographic registrations depict widely varying levels of brightness in the space. The contrast between the bright funnel and the dark ceiling is experienced as quite dramatic. The level of brightness in the funnel and on the floor directly beneath the aperture is quite high.

Very dark surfaces are seen in the top right corner of the photo by the appereances of light on the surfaces that are not illuminated by direct light. As these surfaces slope up and away from the aperture, they are cut off from a large volume of reflected light. The same experience is depicted in the photograph of the aperture in which the same sloping surfaces at the top of the photo appear quite dark.

The simulation of the luminance values shows that the spatial distribution of brightness in the space is even and with varying intensities, which is also true of the observation and model photograph. The space is constantly brightest in the funnel, at the top of the photo of the appereances of light. By contrast, the ceiling surface facing away from the aperture is the darkest, which is also experienced in the observation of the model and the model photographs. This correlation does not change. Depending on the time of year and day, the brightness in the space changes, as indicated by the distribution of colours in the photograph. The bright yellow colours can be seen extending further upwards in the space in mid-morning and the afternoon, and they are most dominant in the middle of the day, i.e. the very brightest at midday. The photo of light from the sky indicates the lowest level of spatial brightness (See Fig. 05).

The brightness varies from bright to darker vertically downwards through the space, with a sudden change in volume of light from the point where the angle of the ceiling changes. There is a clear correlation between the spatial distribution of brightness in the luminance photograph and the experienced spatial distribution of brightness in the model photo.

Shadows

Soft, diffuse shadows are observed in the scale model, and the only distinctly delimited shadow is cast where the wall meets the funnel in a dramatic shift in geometric shape. In perceiving the space as a single interconnected geometric shape, no cast shadows are experienced in the space. However, the geometric dimensions cast their own shadows where surfaces intersect at the aperture of the funnel.

The photographic representations depict the wide variety of shadow effects in the space. The shadows' brightness is high on surfaces around the aperture, where they are diffuse and nuanced. The ceiling's angled surfaces cast the darkest shadows in the space. They are solely illuminated by reflected light, which is why they are

experienced as dark and keenly demarcated monotone shadows but in the photograph characterised by more highly defined contrasts. The shadows accentuate the geometric shapes in the space, the intersecting surfaces forming the funnel, and the varying illuminated areas in the space.

The simulation of the luminance in the space attests to the dark shadows cast in the transition from funnel to ceiling. Here, a sharper contrast than in the photographic representation is depicted. An almost black surface is produced in the area that shapes the aperture.

The shadows in the ceiling are blurred in the luminance simulation in the top left corner, where a pale shadow is visible in the photographic representation. Consequently, pale shadows cannot always be detected in the luminance simulation.

Reflections

The scale model's wood-pulp surface forms a bright, matt surface which explains why the photographic representations depict a diffuse reflection of the light – uniformly from all surfaces. This explains why it is not relevant to describe the light's reflections on the basis of the scale model.

Glare

In the observation of the scale model, no glare is experienced from the matt surface, the eye can adjust to the light to a greater degree than the camera can, and what is experienced in the model photograph as glare or over-illumination is experienced in the observation of the model as wide differences in the spatial level of brightness.

In the representation of the aperture in the light from the sky, the photograph is over-illuminated where the transition from aperture to opening creates sharp contrasts. Glare is also experienced at the top of the photograph of the light in the space in all photographs where the contrast between the dark ceiling and the brightest aperture is produced. The photograph is over-illuminated and completely white.

Glare is usually something to be avoided, but as this space has no other function than to create an experience of daylight, a mild degree of glare is not necessarily a unpleassant experience, if it emphazizes a specific atmosphere of light in the space.

The reason that the daylight in the funnel in the model photograph is experienced as glare is because it is being experienced in relation to the darkness in the space. As the measurements are not relative, the luminance photograph will not register the daylight in the funnel as glare. The photograph continues to depict a scaled level of lightness without any sudden transitions in the colour scheme.

Colour of light

The observations and registrations of the colour of light in both the scale model and the model photographs are not directly relevant, as the artificially-produced sky has specific illuminants that define the colour of the light. This means that it is not relevant for the studies to examine the colour of light.

Colour

The studies were made in the wood-pulp scale model, which is why the model does not have a representative surface. The colour and surface of the wood-pulp panels affect the colour of the surface, which is why it is not relevant to describe the colour of the surface on the basis of the scale model.

Large spatial shadows

In observing the scale model, the large spatial shadows are clearly experienced where the funnel intersects with the ceiling surfaces and where it casts a attached shadow. In addition, spatial shadows arise where the surfaces of the celing intersect, and where the floor meets the walls. The spatial shadows depict the space.

The registration depicts the shades of the many angled surfaces, and their points of intersection are even more distinct than in the observation. The edge of the funnel casts deep shadows where the ceiling meets the walls. As the space is dominated by diffuse light from the sky and the reflecting and relatively weaker light, the spatial shadows appear throughout the space as soft, which is why they are not experienced as well-defined and contrasting.

The luminance measurements show how the light is evenly distributed in a scaled intensity, and that the only defined shadow is cast against the darker ceiling. In the version of the aperture, shadows other than the one cast by the funnel into the space are visible to only a minor extent. The small shifts between the surfaces are so pale that no differences are produced in the simulation. However, we see multiple shadows cast in the version of the appereances of light where the geometric differences are greater and therefore cast darker shadows.

Large and small attached shadow

As the space of the scale model does not contain objects, it is not relevant to describe large attached shadows.

Small detailed and textural shadows

The surfaces of the scale model are atypical in terms of scale and materials for the space, which is why it is not relevant to describe shadows cast by details and textures.

Summary

The first question of this study examines the specific daylight qualities that can be depicted by the different types of representation.

The observations of the scale model assist in understanding how daylight is present in the space and influenced by the eye's ability to adapt to the light in the space. To supplement this, the model photograph works to register the variation studies. The luminance study supplements the depiction of the model photograph, as it can depict whether the space is sufficiently bright and where undesirable dark areas are produced. A solid basis for preparing an aperture to achieve a specifically preferred effect is established in the interplay between the three methodologies.

The observation in the model is particularly intuitive to interpret, but it is difficult to compare or to see the differences between any variations over time. The model photographs are legible and contributes to the comparative studies. At the same time, it can be difficult to determine the scale of the photographs, especially given that they are devoid of objects and surface materials. The three methodologies are interpreted according to the concepts of Liljefors and Frandsen to ensure a systematic process.

This leads to the study's second question, dealing with how the qualities of daylight can be interpreted according to the concepts of Liljefors and Frandsen.

By applying Anders Liljefors' seven variables to describe daylight quality and Sophus Frandsen's categorisation of spatial shadows, the types of representation can provide information on the large spatial shadows as well as on the level of lightness and spatial level of brightness in the space. However, the small shadows cast by small objects and textures, as well as colour and reflection, cannot be described using the concepts, as daylight is heavily influenced by the geometric shapes and surfaces of the space and the model's materials and surfaces are atypical.

Consequently, the representation of light in the model is incomplete, which is why the methods are recommended as part of the outline process for forming an impression of the experience.

Discussion

The representation of the experience of daylight is informed by the three methodologies, all of which contribute to different types of information, which is why the methodologies supplement one another.

The observation creates an experience for the oberserver and enables a dynamic experience, as the peripheral field of vision perceives a wider field. However, the subjective observation in itself establishes a deficient basis for comparison and description. The model photograph is informative and communicative, and the series of photographs lays the basis for comparing and analysing the appereance of daylight. At the same time, the experience created by the observation differs from the representation contributed by the model photograph. The photographs also depict a higher degree of contrasts and darker shadows.

The simulation of the luminance distribution indicates how the intensity of daylight is evenly scaled from the aperture down into the funnel and how it is evenly distributed in the rest of the space. This information is also communicated in the model photograph. However, the luminance simulation imparts knowledge that cannot be interpreted or analysed in the other types of representation, i.e. quantitative information about the value of the light that is not relative or influenced by adaptations. The evaluation of the level of lightness in the observation of the model and the model photograph is described in relative terms, as the eye adapt according to the brightest and darkest areas. On the other hand, the luminance value, seen in isolation, is comparable to other spatial geometrics.

As a result, the model photograph and the luminance photograph form a point of departure for a comparative study of these two methodologies, as they are registered in the same way. This comparison shows that the model photograph has more nuances within the shadows than the luminance photograph, where diffuse shadows disappear in the weaker reflected daylight.

Conclusion

The three types of representation inform the study about the daylight in the scale model, and the observation is affected by the eye's ability to adapt to the light from the sky, by contrast with the camera. The photographic representation and the luminance simulation render the comparative study possible through the series of photographs.

Daylight is heavily influenced by the surroundings, geometric factors and

surfaces in the space, which is why this study, done in a scale model made of wood-pulp board without representative surfaces, is unable to provide information about colour, the reflections of light, or shadows cast by small objects and textures in the space. At the same time, the colour of light is influenced by the daylight laboratory's light from the sky, which is why it is not relevant to describe this in this study either.

The model can make use of the three selected types of representation to describe the large spatial shadows and the level and spatial distribution of light in the space, but the concepts associated with materiality and surface and with the shadows cast by the small objects and textures cannot be described in this scale model. Therefore, we can extract that daylight has no scale, but that the quality of daylight has a scale. We can experience, observe and register perceived daylight in the space of the scale model, but when we are to describe the experience and to characterise daylight's qualities, this is not clearly seen in the model due to its scale and the detailling of surfaces.

Knowledge from this method brings an awareness on the difference between the scale model 1:10 and the space in 1:1. This will be unfolded at the presentation at the conference where it is possible to visit and experience the pavilion in Copenhagen.

The experience of daylight is linked to a scale because human beings have a scale. Therefore, one can extract - that daylight is without scale, but that the perceived quality of daylight has a scale.

Bibliography

Christensen, E. (1976) *Sol på akademiet*. Copenhagen: Arkitektens forlag, Arkitekten 10.

Dubois, M. (2019) *Daylighting and lighting: under a Nordic sky.* Studentlitteratur

Egan, M. et al. (2001). *Architectural lighting. 2nd edition. USA: McGraw-Hill Science/Engineering/Math.* Print.

Frandsen, A. K. (2005) *Tegning og bygning: et studium af arkitektens arbejdsredskaber og det byggede værk*. Copenhagen: The Royal Danish Academy of Architecture.

Frandsen, S. (1985) *Lyset i rummet og lyset på tingene*. Copenhagen: Louis Poulsen, LP NYT 492.

Frandsen, S. (1989) *The Scale of Light – a New Concept and its Application.* Paris: 2nd European Conference on Architecture, 4–8 December 1989, Paris, France.

Grønlund, L. (2015) *Lysvirkninger – fremkaldelser af rummets arkitektur*. PhD thesis. Aarhus Aarhus School of Architecture.

Guzowski, M. (2018) *The Art of Architectural Daylighting.* London: Laurence King Publishing Ltd. Print.

Liljefors, A. (1997) *Seende och Ljusstrålning*. *Sweden: Royal Institute of Technology, Stockholm*

Mathiasen, N. et al. (2006) *Lys kompendium II.* Copenhagen: The Royal Academy of Fine Arts' School of Architecture

Mathiasen, N. (2015) *Nordisk lys og dets relation til dagslysåbninger i nordisk arkitektur*. PhD thesis. Copenhagen: Royal Danish Academy – Architecture, Design, Conservation.